TURNING/MILLING ACCESSORIES & WORK HOLDING

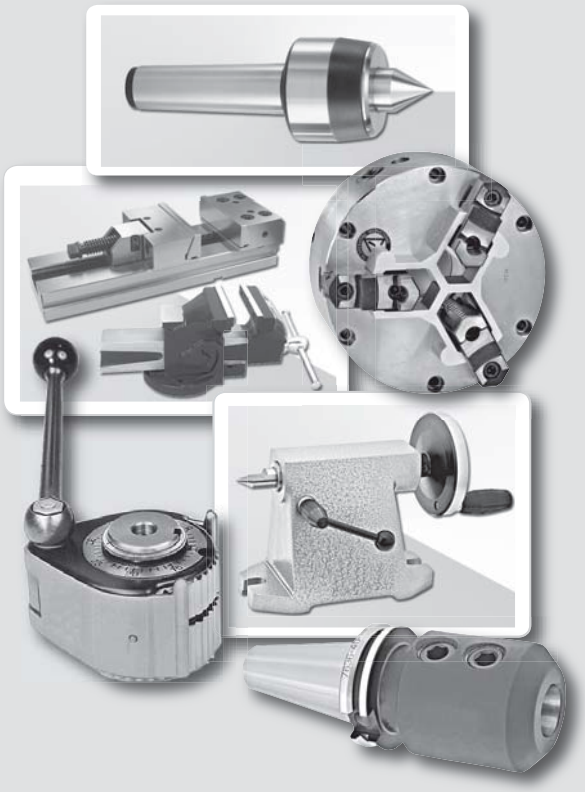

TURNING ..... C1 - C44

MILLING ..... C45 - C72

MACHINE ACCESSORIES ..... C73 - C84

VISES ..... C85 - C103

DRILLING ..... C104 - C113

TAPPING ..... C114 - C117

BORING ..... C118 - C123

CLAMPING COMPONENTS ..... C124 - C144

FLUID ACCESSORIES ..... C145 - C150

C